PD3006 Order Form

AUDIO VISUAL FURNITURE International

Date _____
AVFI Sales REP _____
Customer Signature _____

Quote No. _____
Customer No. _____
AVFI No. _____

Office Use Only

To generate your order form, please refer to the information provided below to insert the alphabetic and/or numeric code in the respective category boxes. Please note that without this filled out Order Form, your purchase **cannot** be processed.

1 Product Model	2 Finish	3 Chargeable Accessories **(One Code Per Box)**										4 Custom Cutouts
PD3006												

1 Product Model

Code **PD3006**

2 Choose Product Finish

Standard Finishes (Ships within 1-15 business days)

Code **BCL** (Burma Cherry)
Code **BWL** (Brazilian Walnut)
Code **BKL** (Black)

Optional Finishes (Ships within 20 business days)

MPL **ARL** **BRL** **CHL** **WHL** **STL**

3 Chargeable Accessories (Check all that apply)

Code **O0**	No Accessories	
Code **A1**	**SH-FL** Folding Side Shelf	Qty_____
Code **B1**	**9031-1** 1U Utility Metal Shelf	Qty_____
Code **B2**	**9031-2** 2U Utility Metal Shelf	Qty_____
Code **B3**	**9031-3** 3U Utility Metal Shelf	Qty_____
Code **B5**	**9052-2** 2U Sliding Metal Drawer	Qty_____
Code **B6**	**9052-3** 3U Sliding Metal Drawer	Qty_____
* Code **D1**	**MIC-18** MX418 S/C Microphone	Qty_____
* Code **D2**	**LIGHT-18** Gooseneck Light	Qty_____
* Code **D3**	**FM3** Timer/Clock	Qty_____
Code **D4**	**FAN** Quiet Cooling Fan (Maximum 2)	Qty_____
Code **E1**	**PB** 6 Outlet Power Bar	Qty_____
* Code **E3**	**CUB3** Round Cable Well	Qty_____
* Code **E4**	**SF-PB3** 3 Outlet Power Bar	Qty_____
* Code **E5**	**CUB5** Black Round Cable Well	Qty_____
* Code **E6**	**CUB5** Silver Round Cable Well	Qty_____
* Code **E7**	**PC-PATCH** Power-Data Module	Qty_____
* Code **E8**	**CUB8** Table Top Cable Well	Qty_____
* Code **EA**	**CUB4S** Silver Power Panel	Qty_____
* Code **EB**	**CUB4B** Black Power Panel	Qty_____
* Code **EF**	**CHGQIB** Wireless Charging Station Black	Qty_____
Code **H4**	**RR10** 10U Set of Rack Rails (Rear)	Qty_____
* Code **J1**	**9107** Lacing Bar	Qty_____
Code **K1**	**C900S** Single Monitor Arm	Qty_____
Code **K3**	**PLM1022** Monitor Mount	Qty_____
Code **K4**	**MM1232** Monitor Mount	Qty_____
Code **M5**	**MCB1925** Monitor/Camera Bracket	Qty_____
Code **Q1**	**LEV4A4X** 4x Levelers for Non-Mobile Applications	Qty_____
* Code **EJ**	**CUB22** Power Panel	Qty_____
* Code **EK**	**CUBM3** 3-Module Power & Data Panel	Qty_____
* Code **EL**	**CUBM4** 4-Module Power & Data Panel	Qty_____
* Code **K2**	**C900D** Dual Monitor Arm	Qty_____

* **Cutout Required** (Extra Charges will apply)

Comments (Please use this section to provide additional information)

_____
_____
_____
_____
_____
_____
_____
_____
_____
_____

Notes

CAD Drawings/Symbols
CAD drawings are available by request at sales@vegroup.net
Custom Cutouts
Estimated lead time within 20 business days from receipt of P.O. and signed drawings.
Customizations
Modifications to design such as shape and/or size variations have to be quoted on a per case basis and are applicable for quantities of 10+ only.

Custom Cutout Option on Page 2

AUDIO VISUAL FURNITURE International

Please indicate custom cutout location on the drawing (s) below

4 Custom Cutout Option (Extra charges will apply)

Top Rear Removable Panel cutout in flat position

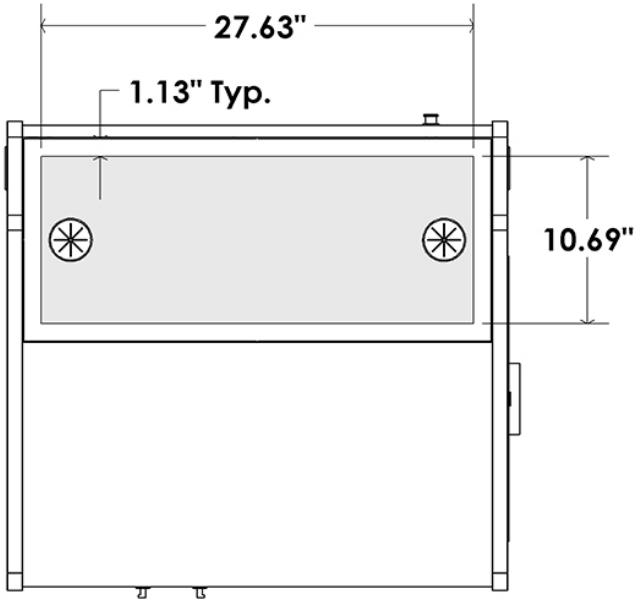

Same Top Rear Removable Panel cutout in a wedge position (see assembly instructions)

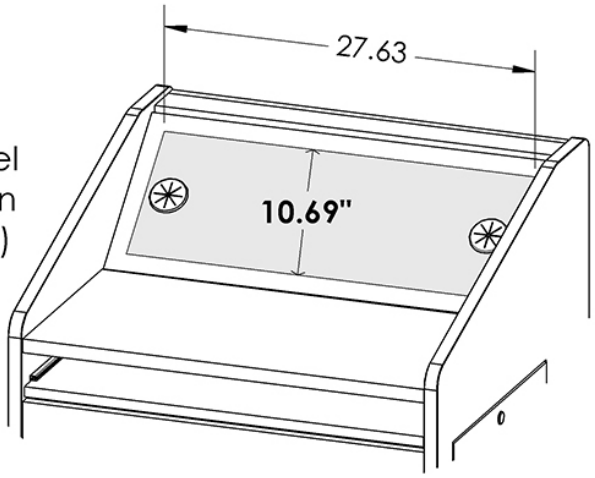

Code **C0** No Custom Cutout

Code **CC** Custom Cutout (Specify on Cutout Area Above)

☐ Cutout Area - Flat or Wedge Position (27.63”W X 10.69”D)